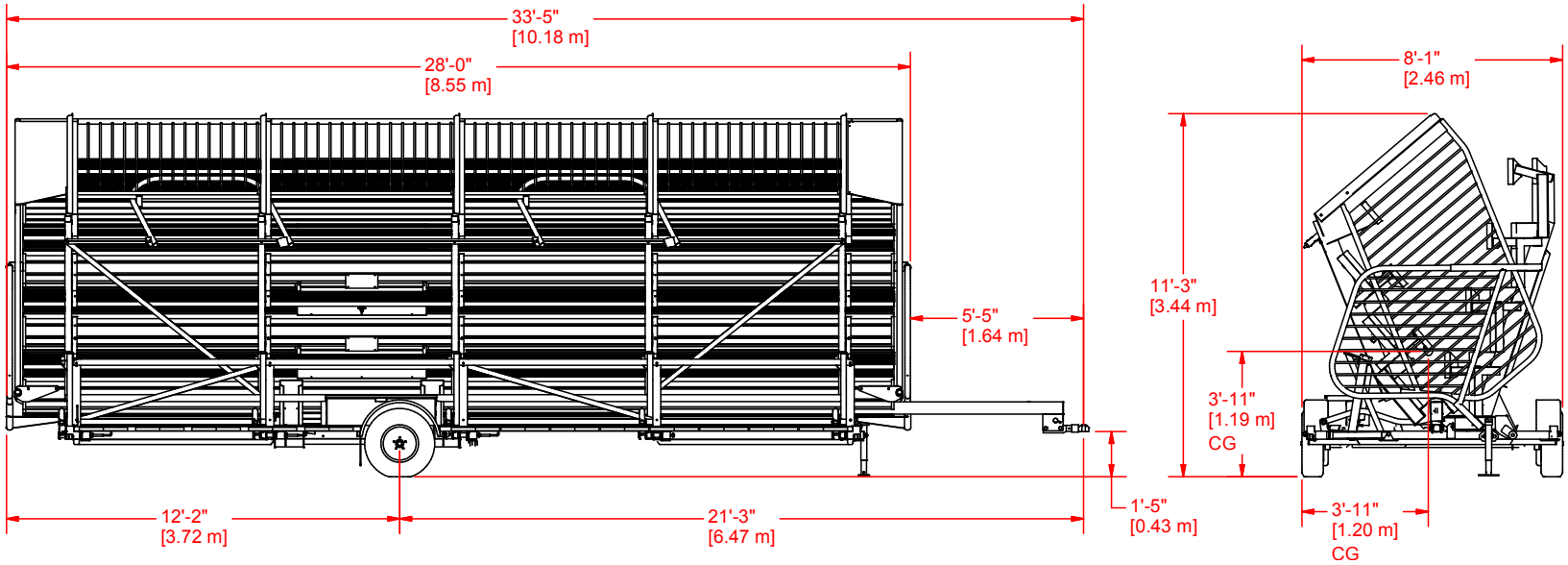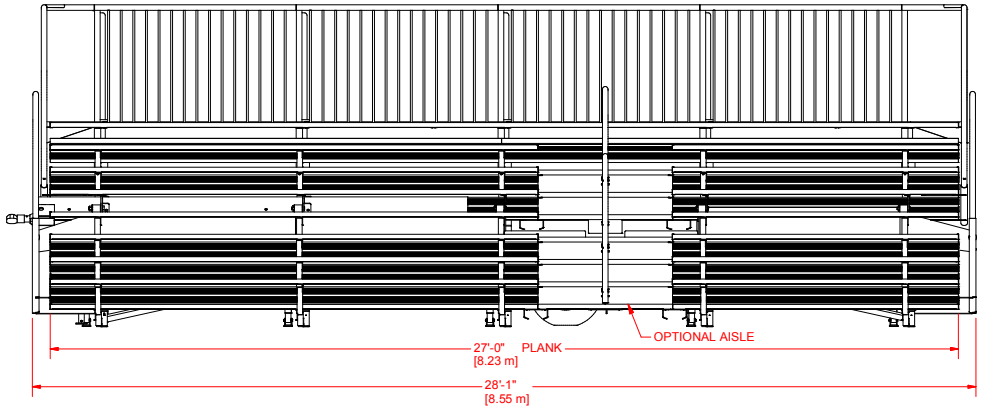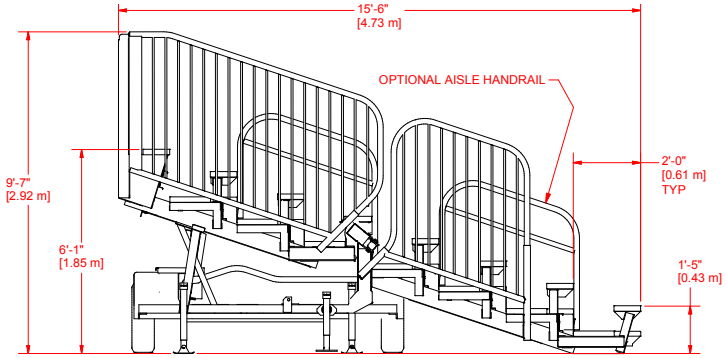PopUpArena PUA125 Operational Dimensions